DACIA
SANDERO
SANDERO

THE PERFECT PARTNER FOR YOUR CITY LIFE

Dacia Sandero fits better than ever into your lifestyle and desires. Its lines combine robustness with dynamism in a sleek and distinctive design. Stylish, practical and modern, it offers the essential features and standards of comfort to make every journey pleasurable.

UP TO 1,108 dm³ OF BOOT SPACE(1)

HANDS-FREE CARD(3)

10" SCREEN WITH CONNECTED NAVIGATION(2)

NEW PIXELATED FRONT GRILL

WIRELESS SMARTPHONE CHARGER(2)

(1) Rear bench seat folded down. (2) Standard on Journey. (3) Available only on the journey version.

INTERACTIVE MENU

01. DESIGN

02. DRIVING PLEASURE

03. INTERIOR SPACE

04. MULTIMEDIA

05. DRIVER ASSISTANCE SYSTEMS

06. EQUIPMENT AND ACCESSORIES

A WELL-THOUGHT-OUT STYLE

Admire the striking style of Dacia Sandero with its new, redesigned front end. The aesthetics of the new "pixelated" grille and the inverted T-shaped brand light express its modernity. The incorporation of new headlights reinforces the impression of character and the Dacia brand identity.

Sandero has renewed its attention to detail by adopting new 16" alloy wheels, a shark-fin aerial and new body colours.

New LED front brand light

ONE SIMPLE ENGINE

Also available with the 100 TCe engine, this latest-generation 3-cylinder direct injection turbo engine gives you the best driving pleasure and possible performance/fuel consumption ratio.

EVEN MORE COMFORTABLE AND CONNECTED

Sandero's interior has been revamped with a new, stylish and ergonomic dashboard. The interior design has also been completely revamped for all versions, with new comfortable seats and special blue upholstery in the journey version.

The new air vents visually harmonise with the exterior design. Their modern design reflects the new technology you'll find on board: an adjustable steering wheel with digital controls, a 7" digital driver display(1) and a 10" multimedia screen with connected navigation(1) enhance your driving experience and comfort.

On the central 10" screen(2), access new features such as smartphone mirroring, which allows you to find your favourite apps on the screen or the integrated Media Nav Live connected navigation(1) to get you on the road. Thanks to the wireless smartphone charger(1), your smartphone stays synchronised without interruption.

The technology also supports you to make driving easier and safer, such as the latest advanced driver attention monitoring system.

7" digital driver display with driving information

Wireless smartphone charger(1)

(1) Standard on Journey. (2) Available from Expression.

TAKE CONTROL OF THE SPACE

Dacia Sandero adapts perfectly to your life. And it has the resources, with its large boot and rear folding bench seat, to adapt the space to your requirements. It also comes with a lot of storage space: cup holders, door bin, closed glovebox and storage console that perfectly meet your organisational requirements.
With the new YouClip system, you will also be able to hang your belongings thanks to fixing points and accessories that put your passenger compartment in order.

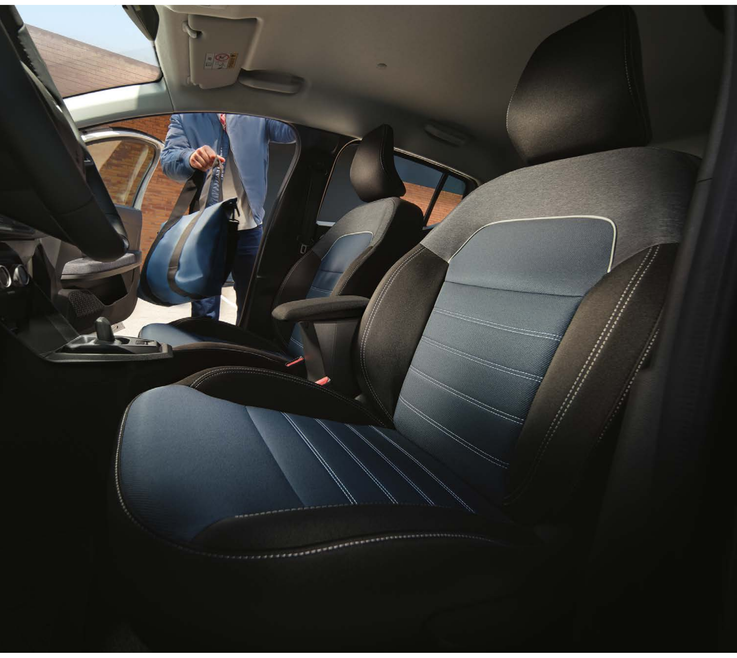

The generous width at the shoulders for the driver and the leg room for passengers in the rear provide optimum comfort. Sandero offers a decidedly warm welcome.

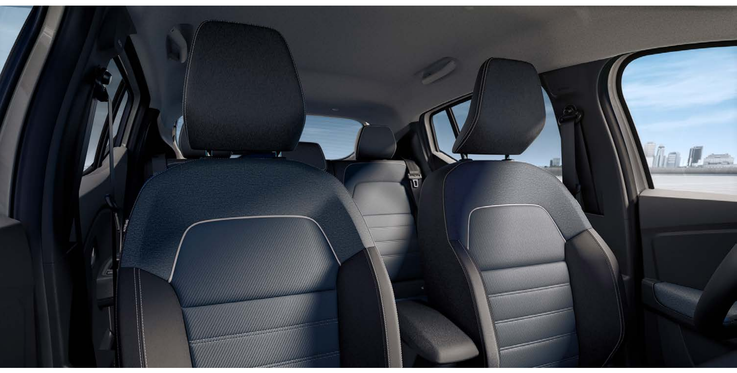

5 real seats

Boot space: 328 dm³ / 410 litres

YOUCLIP FASTENING SYSTEM: MORE SPACE FOR YOU

YouClip makes your life even more comfortable and organised with its clever multi-purpose fastening system for hanging a wide range of accessories available in the range. These can be clipped to the fasteners distributed throughout the passenger compartment and boot: up to 3 fasteners as standard.

2 additional attachment points behind the headrests are available as an accessory to extend your possibilities up to 5 YouClip points.

5 real seats

3-in-1 YouClip (cup holder + lamp + hook)

CONFIGURE AND ORDER

MENU ^

CHOOSE YOUR MULTIMEDIA PREFERENCES

Dacia Sandero has three new comprehensive multimedia offerings, so it's up to you to choose your equipment level: Media Control[1], controlled from your smartphone and integrated into the dashboard design, allows you to control radio, music, Bluetooth® connection, USB and telephony.

The new 10" Media Display, featuring an easy-to-use customisable interface, allows you to easily access GPS navigation via your smartphone, manage calls and music, and use voice commands.

Media Display[2]

The new Media Nav Live transforms your dashboard into a truly smart control centre. From the 10" touchscreen: navigation and connected services in real time, integrated app store and 3D Arkamys® audio system for high-quality sound immersion. These last two systems are compatible with wired and Wi-Fi connections with Android Auto™ and Apple CarPlay® smartphone mirroring.

New Media Nav Live[3]

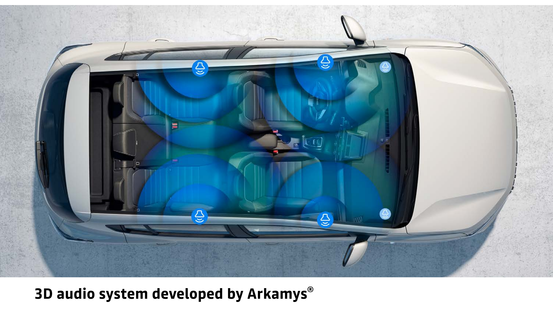

3D audio system developed by Arkamys®

(1) Standard on Essential. (2) Standard on Expression. (3) Standard on Journey.
Android Auto™ is a Google Inc. brand.
Apple CarPlay® is an Apple Inc. brand.

SAFETY ALL THE TIME

At Dacia, safety has always been at the heart of our concerns. Built on the latest platform designed for our vehicles, Dacia Sandero has a reinforced body structure and new-generation assistance systems. Thanks to the My Safety button, you can disable some of these assistance systems at each start-up as well as when the vehicle is running. With Dacia, drive with peace of mind.

DRIVER DROWSINESS AND ATTENTION WARNING SYSTEM
This assistance system warns the driver if fatigue is detected and prompts them to take a break.

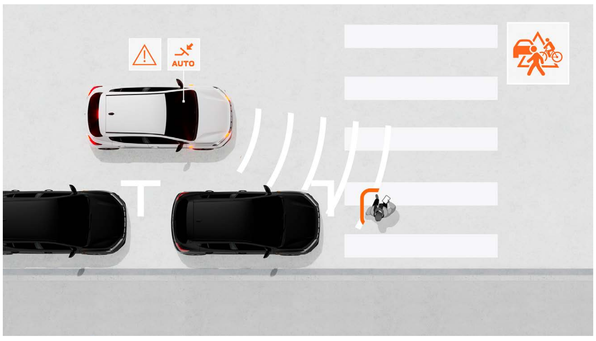

AUTOMATIC EMERGENCY BRAKING (AEBS) WITH PEDESTRIAN/CYCLIST DETECTION
This system prevents the risk of frontal collisions involving other vehicles, pedestrians or cyclists straight ahead and at junctions. It alerts the driver and can automatically brake the vehicle if necessary.

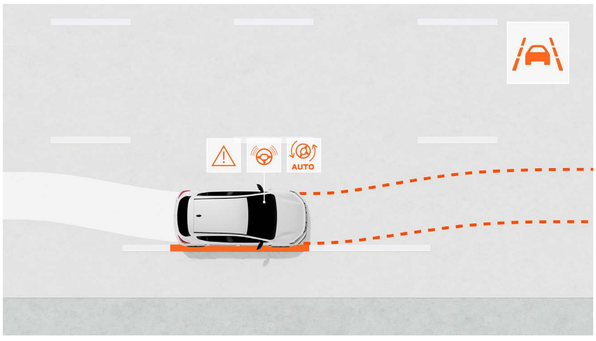

LANE KEEPING ASSIST
Monitors the vehicle's path in its lane and corrects it if necessary by automatically steering it.

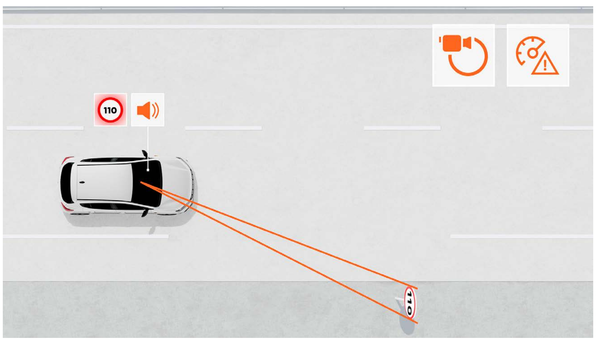

TRAFFIC SIGN RECOGNITION WITH SPEED ALERT
This system provides a reliable real-time indication of the maximum speed on the road and warns the driver if they exceed the speed limit with visual and audible alerts (which can be disabled).

DISCOVER THE EQUIPMENT

COLOUR PALETTE

+

TRIMS

+

ACCESSORIES

+

ENGINES

+

EQUIPMENT AND OPTIONS

+

DIMENSIONS

+

06. COLOUR PALETTE

AMBER YELLOW	SANDSTONE	GLACIER WHITE	SHADOW GREY	IRON BLUE
URBAN GREY	CEDAR GREEN			

AMBER YELLOW(1)*

SANDSTONE(1)*

GLACIER WHITE(2)

SHADOW GREY(1)

IRON BLUE(1)

URBAN GREY(1)*

CEDAR GREEN(1)*

(1) Metallic paint. (2) Opaque paint.
* Not available on essential.
Non-binding photos.

essential

MAIN EQUIPMENT

EXTERNAL APPEARANCE
- "Pixelated" front grille with Dacia logo
- Brand light in the shape of an inverted "T" and automatic LED daytime running lights
- Coloured front bumper
- Automatic activation of daytime LED running lights
- Body tone front/rear bumpers
- Black exterior door handles
- Black door mirrors
- 15" Elma wheel trims

INTERIOR APPEARANCE
- White air vent centre
- Fog Grey airvent surrounds and white sliders
- Black interior door handles
- Specific fabric upholstery for essential version
- Prefitted to accept YouClips
- New steering wheel

ACTIVE AND PASSIVE SAFETY
- My Safety button to manage driver assistance systems
- Anti-locking braking system (ABS) + Emergency Brake Assist (EBA)
- Automatic emergency braking with pedestrian/cyclist detection
- Electronic Stability Control (ESC) with Hill Start Assist (HSA)
- Emergency call (E-call)
- Event (accident) data logger
- Vehicle pre-disposition for alcohol interlock immobiliser
- traffic sign recognition with over speed prevention
- Lane change warning
- Lane keeping assist
- Driver attention alert
- Front/rear "Rescue Code®" QR Code
- Driver's front airbag / passenger's side airbag, can be disabled
- Shoulder and curtain side airbags
- Rear parking sensors
- Tyre pressure detection
- Tyre inflation kit
- Isofix mounts for child seats in both side rear seats
- Drowsiness detection camera
- Front parking distance control

DRIVING AND CONTROLS
- Rain and light sensors
- Electrical power steering
- Stop & Start
- On-board computer: distance travelled, average speed, range, average fuel consumption (including LPG)
- Speed limiter / cruise control

VISIBILITY
- Door mirrors with interior manual adjustment

COMFORT
- Automatic door locking when in motion + folding key
- Front electric windows
- Height-adjustable steering wheel
- Front ceiling light
- 1 rear 12 V socket

MULTIMEDIA AND AUDIO
- New Media Control: DAB radio with steering wheel controls, 1 USB-C socket, 2 speakers, Bluetooth® telephone system with satellite controls on the steering wheel, fixed smartphone holder on the dashboard, new Dacia Media Control smartphone app

OPTIONS
- Spare wheel + jack

expression

MAIN EQUIPMENT
expression = essential+

EXTERNAL APPEARANCE
- Body-tone door mirrors
- Body-tone outside door handles
- Shark fin aerial
- 16" Atara flexwheels

INTERIOR APPEARANCE
- Steel Grey interior door handles
- New fabric covering on dashboard and front door armrests
- New soft feel heightand reach-adjustable steering wheel
- New specific upholstery in expression version
- Mid-high centre console with manual parking brake

COMFORT
- Automatic windscreen wipers
- Electrically operated door mirrors
- Manual air conditioning
- One-touch driver-seat window control (with anti-trapping function), non one-touch passenger side
- Electric rear windows
- Reach-adjustable steering wheel
- Height-adjustable driver's seat
- Reversing camera

MULTIMEDIA AND AUDIO
- Media Display: multimedia system with 10" touchscreen, DAB digital radio, smartphone mirroring via USB cable and Wi-Fi, Bluetooth® connection, satellite controls on steering wheel, 4 speakers, 3 USB-C ports

OPTIONS
- Spare wheel + jack

MAIN EQUIPMENT
journey = expression +

EXTERNAL APPEARANCE
- 16'' Tamia alloy wheels

INTERIOR APPEARANCE
- Blue upholstery in the journey version + dashboard + decorative elements on the doors
- Front door sills

ACTIVE AND PASSIVE SAFETY
- Multi view camera
- Front parking distance control
- Blind spot warning

DRIVING AND CONTROL DEVICES
- Electric handbrake
- Keyless entry

COMFORT
- Automatic air conditioning system
- 7" digital instrument panel
- Modular boot with twin-level floor
- Heated front seats
- Multi-view camera + automatic dipped/main beam headlight activation + electrically folding mirrors

MULTIMEDIA & AUDIO
- Removable telephone holder
- Media Nav: multimedia system with 10" touchscreen, connected navigation with real-time traffic information, DAB digital radio, smartphone mirroring via USB cable or wirelessly via Wi-Fi, Bluetooth® connection, satellite controls on the steering wheel, 6 speakers (4 speakers + 2 tweeters), 3 USB-C ports + wireless charger

OPTIONS
- Spare wheel + jack

CONFIGURE AND ORDER

MENU ^

STYLE PACK

Roof spoiler

Shark fin aerial

Illuminated door sills

PROTECTION PACK

Front & rear lower door protectors

Front & rear mud guards

Boot mat

STORAGE PACK

Magnetic phone holder

Rear tray table & fixings

Storage pack + available with 2 x rear tray tables & fixings

TOURING PACK

Roof bars

Roof box 400L

YOUCLIP ON THE GO

3-in-1 cup holder (cup holder + lamp + hook)

Multifunction cup holder

Hook

Lamp

Bag

Wireless smartphone charger

Smartphone holder

Tablet holder

Headrest base mount

Foldable shopping bag

Glasses case

DASH CAM PACK

Front and rear dashcam

CYCLE PACK

Roof bars

2 x bike carriers for roof

TOW BAR

Swan neck towbar 13 pin

PREMIUM DELIVERY PACKS

Premium mats

Safety kit

Key card wallet

Rubber boot mat

PREMIUM DELIVERY PACK
Premium mats
Safety kit
Key card wallet

PREMIUM DELIVERY PACK+
Premium mats
Safety kit
Key card wallet
Rubber boot mat

SPARE WHEEL KIT

All accessories purchased prior to vehicle registration come with a 3 year manufacturers warranty
Accessories are fitted post production and may have an impact on WLTP fuel (actual) consumption and CO_2 figures

DOWNLOAD
THE ACCESSORIES BROCHURE

	100 TCe
ENGINES	
Fiscal rating (hp) (France)	5
Fuel	Unleaded fuel (E10)
Max. power kW EEC (hp) at engine speed of (rpm)	74 (120 hp) from 5,000 to 5,250
Max. torque Nm CEE (m.kg) at an engine speed of (rpm)	200 from 2,900 to 3,500
Gearbox type	Manual 6-speed
Injection type	Turbo direct injection
Capacity (cm3)	999
Number of cylinders/valves	3/12
Emission control standard	Euro 6e bis
CHASSIS AND STEERING	
Tyre dimensions	185/65 R15 88H - 195/55 R16 87H
Steering - Turning circle between kerbs	10.64
Front suspension	Pseudo McPherson with lower wishbone, spiral spring suspension with telescopic hydraulic shock absorbers and anti-roll bar
Rear suspension	Semi-rigid axle with anti-roll bar spring suspension and telescopic hydraulic shock absorbers
PERFORMANCE	
Maximum speed (mph)	111
0-62 mph (s)	9.7
FUEL CONSUMPTION AND EMISSIONS(1)	
Approval protocol	WLTP(2)
Fuel tank capacity (l)	50
CO2 emissions (g/km)	121-122
VOLUMES AND WEIGHTS	
Minimum curb weight in running order	1,059
Maximum kerb weight in running order	1,132
Gross vehicle weight (GVW)	1,570
Gross train weight (GTW)	2,550
Max. braked towing weight	980

(1) Official consumption and emissions according to applicable regulations. (2) WLTP (Worldwide Harmonised Light Vehicle Test Procedures): this new protocol provides results much closer to those found in daily use compared with the NEDC protocol. CO_2 emissions are certified using a standard, regulatory method. This method is identical for all manufacturers and enables vehicles to be compared with one another.

06. EQUIPMENT & OPTIONS

	essential	expression	journey
EXTERNAL APPEARANCE			
LED brand light	•	•	•
Automatic activation of daytime LED running lights	•	•	•
Grille	White	White	White
Dacia rear lettering	White	White	White
Front/rear bumpers	Body-coloured	Body-coloured	Body-coloured
Exterior door handles	Black	Body-coloured	Body-coloured
Door mirrors	Black	Body-coloured	Body-coloured
15" Elma steel wheels	•	-	-
16" Atara flexwheels	-	•	-
16" Tamia alloy wheels	-	-	•
Shark fin aerial	-	•	•
INTERIOR APPEARANCE			
Centre of air vents	Black + white sliders	White + white sliders	White + white sliders
Air vent surrounds	Fog Grey	Fog Grey	Fog Grey
Interior door handles	Black	Black	Steel Grey
Upholstery on the dashboard and front door armrests/trim on the front door panels	- / -	Fabric / -	Fabric / -
Split-fold rear bench 1/3 & 2/3	•	•	•
Soft Feel steering wheel	-	•	•
Front door sills	-	-	•
Special upholstery for essential and expression versions	•	•	-
Special fabric upholstery for journey version	-	-	•
YouClip attachment system	•	•	•
ACTIVE AND PASSIVE SAFETY			
My Safety button to manage driver assistance systems	•	•	•
Anti-lock brake system (ABS) + Emergency brake assist (EBA)	•	•	•
Automatic emergency suburban braking (AEBS) with pedestrian/cyclist detection	•	•	•
Electronic Stability Control) with Hill Start Assist (HSA)	•	•	•
Emergency call (subject to available compatible network; 2G/3G or 4G/5G depending on the vehicle)	•	•	•
Event (accident) data recorder	•	•	•
Vehicle pre-disposition for alcohol interlock immobiliser	•	•	•
Traffic sign recognition with speed alert	•	•	•
Lane change warning	•	•	•
Lane keeping assist	•	•	•
Driver attention alert	•	•	•
Front / rear "Rescue Code®" QR Code	•	•	•
Driver's front airbag / passenger's side airbag, can be disabled	•/•	•/•	•/•
Shoulder and curtain side airbags	•	•	•
Rear parking sensors	•	•	•
Rear-view camera	-	•	•
Multiview camera	-	-	•
Front parking distance control	-	-	•
Blind spot warning	-	-	•
Electric parking brake, upper centre console with armrest with storage compartment, and 1 USB-C socket in the rear	-	-	•
Driver attention warning and drowsiness detection	•	•	•
Automatic main/dipped beam headlight activation	-	-	•
Tyre pressure detection	•	•	•
Spare wheel + jack	o	o	o
Tyre inflation kit	•	•	•
Isofix child seat mounting system on rear side seats	•	•	•

	essential	expression	journey
DRIVING AND CONTROL INSTRUMENTS			
3.5" black-and-white digital instrument panel	•	•	-
7" digital driver display	-	-	•
Rain and light sensors	•	•	•
Hands-free card	-	-	•
Electrical power steering	•	•	•
Stop & Start	•	•	•
On-board computer: distance travelled, average speed, range, average fuel consumption (including LPG)	•	•	•
Speed limiter / cruise control	•	•	•
VISIBILITY			
Front fog lights	-	-	•
Door mirrors with interior manual adjustment	•	-	-
Electrically adjustable door mirrors	-	•	•
Electrically folding door mirrors	-	-	•
COMFORT			
Wireless charging	-	-	•
Low central console with central armrest	•	-	-
High centre console with central armrest and 1 USB-C sockets at the rear	-	•	•
Manual heating and air conditioning system	•	•	-
Automatic heating and air conditioning system	-	-	•
Electric door locking with radio frequency remote control	•	•	•
Automatic locking of doors when in motion	•	•	•
Driver and passenger electric front windows	•	•	•
One-touch driver-seat window control (with anti-trapping function), non one-touch passenger side	-	•	•
Rear electric windows	-	•	•
Height- and reach-adjustable steering wheel	•/-	•/•	•/•
Front ceiling light	•	•	•
1 rear 12 V socket	•	•	•
Heated front seats	-	-	•
Heated steering wheel	-	-	•
Modular boot with twin-level floor	-	-	•
MULTIMEDIA & AUDIO			
New Media Control: DAB radio with steering wheel controls, 1 USB-C port, 2 speakers, Bluetooth® telephone system with satellite controls on the steering wheel, fixed smartphone holder on the dashboard, new Dacia Media Control smartphone app	•	-	-
Media Display: multimedia system with 10" touchscreen, DAB digital radio, smartphone mirroring via USB cable or wirelessly via Wi-Fi, Bluetooth® connection, satellite controls on steering wheel, 4 speakers, 3 USB-C ports at the front and 1 USB-C port at the back of the centre console	-	•	-
Media Nav Live: 10" screen, navigation with real-time traffic + Arkamys® 6-speaker 3D audio system + DAB digital radio, smartphone mirroring via USB cable or wirelessly via Wi-Fi, Bluetooth® connection, 3 USB-C ports in the front and 1 USB-C at the back of the centre console	-	-	•
Removable telephone holder	-	-	•

-: not available; •: available as standard; o: available as an option.

06. DIMENSIONS

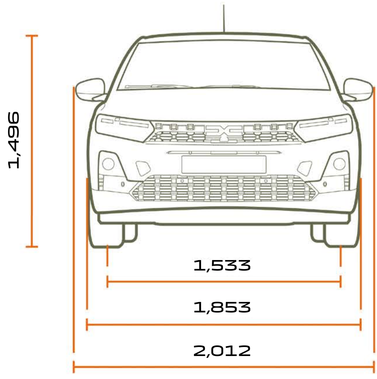

FRONT VIEW

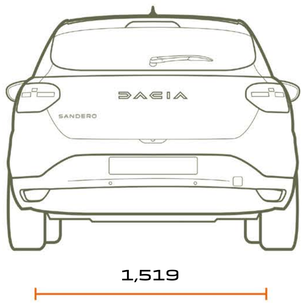

REAR VIEW

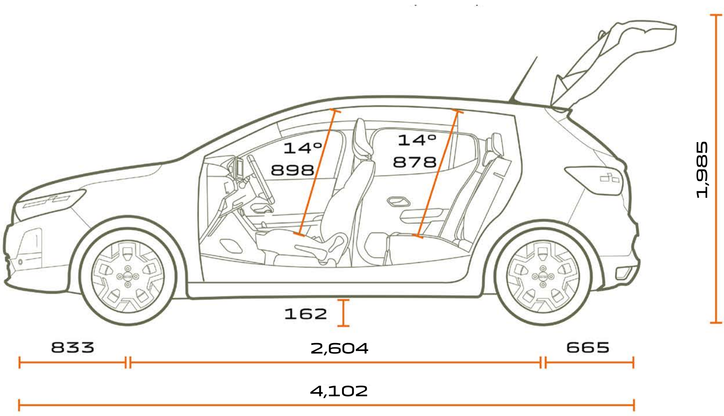

SIDE VIEW

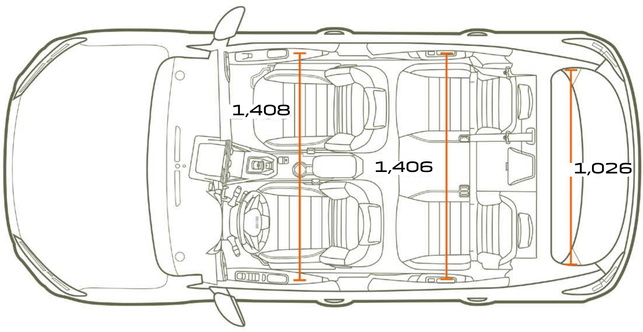

TOP VIEW

BOOT VOLUME
(IN DM3 - VDA /LITRES STANDARD)

Minimum boot volume (ISO 3832 standard)	328/410
Maximum boot volume (dm3) (ISO 3832 standard)	1,108/1,455
Volume under false floor (ISO 3832)	78

Dimensions in mm.

Every precaution has been taken to ensure that the contents of this brochure were accurate and up to date at the time of its release. This document has been created using pre-production and prototype models. As part of its policy of continuous product improvement, Dacia reserves the right to modify at any time the specifications, vehicles and accessories described and shown. Any such modifications are communicated to Dacia dealers as quickly as possible. Depending on the country of sale, certain versions may differ and certain equipment may be unavailable (as standard, on option or as an accessory). Please consult your Dacia brand representative for the latest information. Because of the limitations associated with the medium, the colours featured in this document may differ slightly from those of the actual paintwork or interior trim. All rights reserved. Reproduction in any format and by any means of all or part of this brochure is prohibited without prior written authorisation from Dacia.

Dacia recommends Castrol

PUBLICIS – PHOTO CREDITS: S. STAUB, ©RENAULT MARKETING 3D-COMMERCE – OCTOBER 2026

CONFIGURE AND ORDER

BOOK A TEST DRIVE

FIND YOUR NEAREST CENTRE

MENU