DACIA DUSTER

FOR US, REAL PEOPLE

Dacia Duster goes further: more robust, more outdoor, more technological both on the outside and on board. It goes everywhere with you, whether in your daily life or on your getaways, thanks to its connectivity, unique features, and range of high-performance engines, which unveil a new offering: hybrid 155, mild hybrid 140 and petrol 4x4 with automatic transmission and eco-smart electric driving in the city.

HYBRID 150 4X4 ENGINE

4x4 VERSION WITH MODE SELECTOR(1)

10,1” CONNECTED TOUCHSCREEN

UP TO 5 YOUCLIP ATTACHMENT POINTS

(1) Available on hybrid 150 4x4 extreme only.

INTERACTIVE MENU

01. DESIGN

02. DRIVING PLEASURE

03. CONNECTIVITY

04. INTERIOR SPACE

05. DRIVER ASSISTANCE SYSTEMS

06. EQUIPMENT AND ACCESSORIES

THE REDESIGNED ICONIC SUV

Dacia Duster continues its success story and increases its versatility with its iconic design and its excellent off-road capabilities.
Its Starkle® side protectors and wheel arches showcase its powerful SUV nature.
Extremely practical for all your adventures, it comes with modular roof bars.

Y-shaped brand light

Heated electric door mirrors

NEW EXPERIENCE INSIDE

For the interior of its flagship SUV, Dacia has focused on ergonomics, design and your well-being on board. The driver has a carefully oriented 10,1" central display for easy access. The 7" customisable digital instrument panel keeps driving information in sight.

The new design of the steering wheel makes driving comfortable and makes it easier to get on board. In terms of style, the new graphic identity of the Y-shaped headlights is reflected in the door panel armrests and air vents, which come in Copper Brown for the extreme finish and Megalith Grey for the journey version.

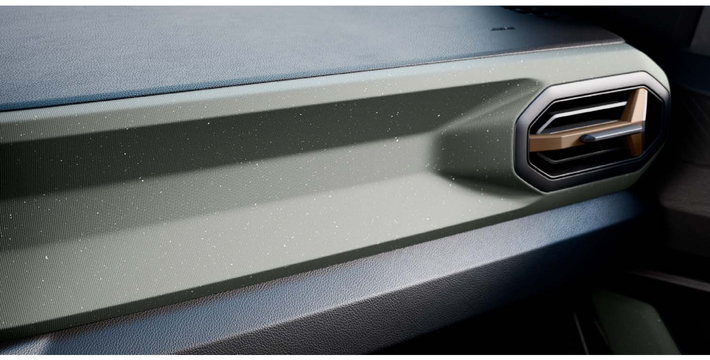

In the extreme version, washable MicroCloud plastic-coated fabric upholstery

ALL-NEW HYBRID 150 4x4 ENGINE

Dacia is breaking new ground with the hybrid 150 4x4 engine, which offers unrivalled versatility by combining hybrid, electric 4x4 and a dual-clutch automatic gearbox. Equally at home in 4x2 or 4x4, Dacia Duster hybrid 150 4x4 can tackle any terrain thanks to its 5 driving modes. Its electric engine, located on the rear axle, means that it can be driven 60% of the time in all-electric mode in town, significantly reducing fuel consumption and emissions. On slippery roads, Snow mode ensures optimum safety thanks to all-wheel drive.

Its 6-speed automatic gearbox with steering wheel paddles ensures ultra-responsive, smoother gear changes.

Thanks to the combination of the automatic gearbox and the rear electric engine, 4x4 driving reaches a new level of simplicity and fluidity. When negotiating tricky stretches of road, there's no need to fine-tune the throttle: the automatic gearbox instantly adjusts gear changes for smooth, controlled progress. And to get out of ruts or tackle the most technical sections, the rear electric engine's immediate torque kicks in without delay.

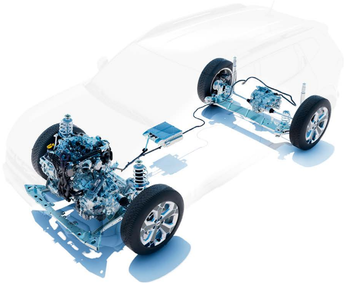

The battery recharges automatically during deceleration and braking.

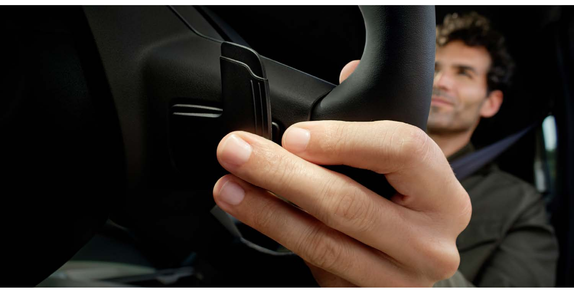

Steering wheel-mounted paddle shifters

6-speed automatic gearbox and drive mode selector dial

HIGH-PERFORMANCE HYBRID ENGINES

The Dacia Duster offers something completely new with a full range of mild hybrid and full hybrid engines, such as the 155 hp full hybrid engine coupled with a clutchless automatic gearbox: unrivalled driving pleasure, up to 80% of driving time in all-electric mode in urban areas, and up to 40% fuel savings[1]. The battery recharges automatically during deceleration and braking.

Dacia Duster still exists in mild hybrid 140 petrol versions, supported by an electric system that accompanies the engine when accelerating and starting for more dynamic sensations and limiting your consumption.

(1) Driving in urban environments, compared with an equivalent internal combustion engine.

A TRUE OFF-ROAD VEHICLE

In its 4x4 version, Duster will enable you to tackle any situation in an instant thanks to its new automatic gearbox and the latest drive mode selector. With high ground clearance of up to 217 mm, an approach angle of up to 31° for climbing slopes in 4x4 mode, Starkle® anti-scratch materials: Duster boasts excellent crossover capabilities while keeping its SUV DNA.

Monitor your vehicle's angle at all times using the "all road info" menu on the 10,1" central display and direct access to the multi-view camera.

Touchscreen with 4x4 information: slope angles and power per axle

4x4 drive mode selection dial

NEW YOUCLIP ATTACHMENT SYSTEM

With YouClip, you get the smartest multi-purpose fastening system for hanging a wide variety of accessories available in the range. These can be easily clipped to 5 attachment points distributed throughout the passenger compartment and boot. And 2 additional points behind the headrests, available as accessories to extend the system and give you a maximum of 7 YouClip points. For even more comfort, the 3-in-1 YouClip accessory combines a cup holder, lamp and hook, which can be detached and used each in a different location on the vehicle or outside.

The YouClip range offers several other useful accessories: the new YouClip glasses case or the YouClip foldable shopping bag, the YouClip multimedia tablet holder and a YouClip pouch for organising activities on board. These practical YouClip products can be detached and used in different places in the vehicle.

YouClip - hook

YouClip - multimedia tablet bracket

YouClip - hook

FOR ALL YOUR SPACE NEEDS

Take advantage of a spacious passenger compartment, intelligently designed for your comfort and that of your passengers. Whatever your expectations, its modularity makes it perfectly versatile.

More space with the adjustable roof bars to take everything you want.

OUTDOOR PERSPECTIVES WITH THE InNature RANGE

Every getaway is unique with Duster. Treat yourself to comfortable nights surrounded by nature with the Sleep Pack[1] from the InNature range and its removable double bed measuring 1.90 m long and 1.30 m wide. It can be set up by one person in less than two minutes and is combined at the rear with a retractable table for breakfast, as well as generous storage space of 160 litres in the hybrid version and 175 litres for other engine types.

Don't forget the blackout blinds sold as accessories to block out light and glare. And to make the most of these relaxing moments, the roof awning is a new, sturdy and weather-resistant accessory that provides instant shade and shelter, while remaining compact and easy to carry.

For a more spacious base camp, the Dacia hatchback tent connects to your Duster when the boot is open, sleeping up to 3 more people and creating 10 m² of protected space at the rear of the vehicle.

Freedom also means being able to take everything that is useful to you. Choose the exclusive InNature roof rack for Duster. It can be easily attached to the modular roof bars in the transverse position, or to the optional transverse roof bars, which can carry loads of up to 80 kg.

Opaque blackout blinds

Dacia tailgate tent (up to 3 people in the bedroom area)

Roof rack

(1) not available in hybrid-G 150 4x4 version.

DRIVE IN COMPLETE SAFETY

To complete the range of equipment already on board for your safety and driving comfort, Dacia Duster is equipped with new-generation driver assistance systems. Using the My Safety button you can deactivate some of these assistance systems at any time. With Dacia, peace of mind accompanies you on every journey.

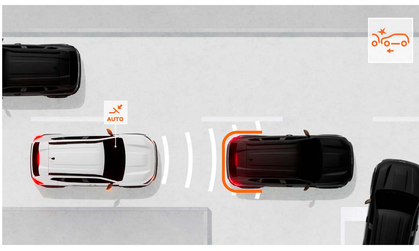

ACTIVE EMERGENCY BRAKING (AEBS)
This system prevents the risk of frontal collisions involving other vehicles, pedestrians or cyclists straight ahead and at junctions.
It alerts the driver and can automatically brake the vehicle if necessary.

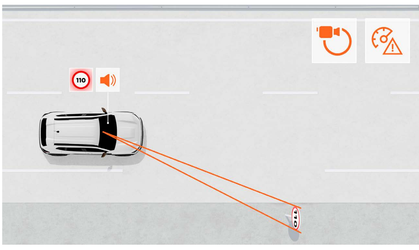

TRAFFIC SIGN RECOGNITION WITH SPEED ALERT
This system provides a reliable real-time indication of the maximum speed on the road and warns the driver if they exceed the speed limit with visual and audible alerts (which can be disabled).

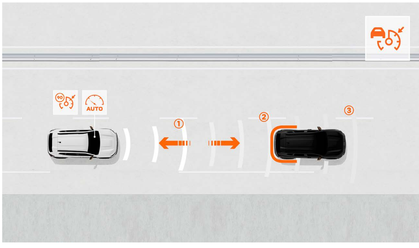

ADAPTIVE CRUISE CONTROL[1]
Let cruise control maintain a safe distance from the vehicle in front of you. The brakes are applied if the distance is too short and the car accelerates again when the traffic becomes more fluid.

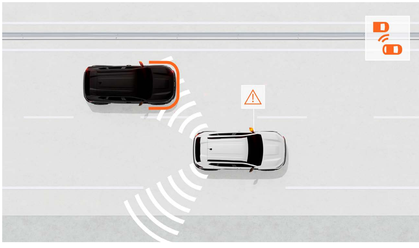

BLIND SPOT WARNING[2]
This aid monitors the driver's areas of restricted vision to warn them with a visual signal if another vehicle or road user is in the area, allowing them to make lane changes safely.

HILL DESCENT SPEED MONITORING
In steep descents, this system limits the speed taken by the vehicle without having to use the brake pedal.

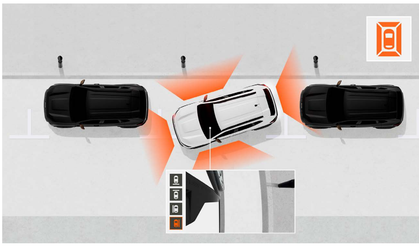

MULTIVIEW CAMERA[2]
The MultiView Camera gives you more eyes! It provides front, rear and side views, helping you detect holes, rocks or obstacles that are not always easy to see, and making driving easier for you.

(1) Standard on Journey and Extreme hybrid versions (including Extreme hybrid 150 4x4). (2) Standard on Journey and Extreme versions.

FIND OUT MORE ABOUT THE FEATURES

COLOUR PALETTE

+

TRIMS

+

ACCESSORIES

+

ENGINES

+

EQUIPMENT AND OPTIONS

+

DIMENSIONS

+

06. COLOUR PALETTE

SANDSTONE	DUSTY KHAKI	TERRACOTTA	GLACIER WHITE	SHADOW GREY

PEARL BLACK	CEDAR GREEN

SANDSTONE(1)

DUSTY KHAKI(1)

TERRACOTTA(1)

GLACIER WHITE(2)

SHADOW GREY(1)

PEARL BLACK(1)

CEDAR GREEN(1)

(1) Metallic paint. (2) Opaque paint.
Non-binding photos.

expression

MAIN EQUIPMENT

EXTERIOR DESIGN
- 17" Tergan alloy wheels
- Body-coloured exterior door handles
- Megalith Grey door mirrors
- Megalith Grey front and rear skid plates
- Starkle® lower door protection

INTERIOR DESIGN
- Steel Grey air vents
- Special Denim upholstery

ON-BOARD EXPERIENCE
- Front and rear one-touch electric window winders
- Electric parking brake
- 5 YouClip attachment points
- Configurable 7" digital cluster
- Media Display: multimedia system with 10" touch screen, radio, smartphone mirroring via USB cable or wireless via Wi-Fi, Bluetooth® telephone system, 4 speakers and remote services pack
- Centre console with armrest and storage compartment

SAFETY AND DRIVING ASSISTANCE
- Rear-view camera
- Rain sensors

OPTIONS
- Spare wheel and jack
- Metallic or special paint

journey

MAIN EQUIPMENT
journey = expression+

EXTERIOR DESIGN
- 18" Tagasan alloy wheels
- Front fog lights
- Tinted windows (rear, quarter panels, tailgate)

INTERIOR DESIGN
- Specific fabric upholstery for journey version

ON-BOARD EXPERIENCE
- Automatic heating and air conditioning system
- Auto-fold door mirrors with control panel on driver's door
- Hands-free card
- Wireless charger
- Electric parking brake
- Media Nav Live: multimedia system with 10" touchscreen, connected navigation with automatic map update for 8 years, radio, smartphone mirroring via USB cable or wireless via Wi-Fi, Bluetooth® connection, 6 speakers, Arkamys 3D sound®, Dacia app store and Remote Services pack
- Driver's seat with lumbar adjustment

SAFETY AND DRIVING ASSISTANCE
- Automatic main / dipped beam headlight activation
- Adaptive cruise control (Standard on hybrid 155 engine only)
- Multi view camera
- Blind spot warning
- Front and side parking sensors

OPTIONS
- Spare wheel and jack
- Metallic or special paint

MAIN EQUIPMENT
extreme = journey +

EXTERIOR DESIGN
- 18" Tagasan semi-diamond cut alloy wheels
- Copper brown door mirror shells
- Modular roof bars
- Front fog lights

INTERIOR DESIGN
- MicroCloud plastic-coated textile upholstery
- Front door inserts in washable MicroCloud plastic-coated textile fabric with Copper Brown topstitching
- Copper Brown details on air vents

ON-BOARD EXPERIENCE
- Automatic heating and air conditioning system
- Auto-fold door mirrors with control panel on driver's door
- Hands-free card
- Rubber boot mat
- Screen-printed front and rear rubber floor mats
- Driver's seat with lumbar adjustment
- Height-adjustable passenger seat
- Media Nav Live: multimedia system with 10" touchscreen, connected navigation with automatic map update for 8 years, radio, smartphone mirroring via USB cable or wireless via Wi-Fi, Bluetooth® connection, 6 speakers, Arkamys 3D sound®, Dacia app store and Remote Services pack
- Centre console with armrest and storage compartment
- Heated front seats
- Heated steering wheel

SAFETY AND DRIVING ASSISTANCE
- Automatic main / dipped beam headlight activation
- Downhill speed control (on 4x2 and 4x4 versions)
- Multi view camera
- Blind spot warning
- Front parking and side parking sensors
- Adaptive cruise control (hybrid version only)

OPTIONS
- Spare wheel and jack
- Metallic or special paint

CONFIGURE AND ORDER

MENU ^

SIDE STEPS
A must-have accessory for accentuating the vehicle's 4x4 style. They allow you to enter and exit the vehicle more easily and to reach objects carried on the roof with ease. It also protects the bodywork from small daily bumps.

SHARK FIN AERIAL
Add an elegant touch with this shark fin aerial, which merges seamlessly into the lines of your vehicle.

TOOL-FREE REMOVABLE TOWBAR
Tow or carry your bicycle, trailer, boat or canoe carriers in complete safety with this towbar developed by Dacia. Thanks to the ball joint that can be easily removed without tools, the aesthetic appeal of your vehicle is maintained.

DACIA AERO CARGO BOX™
For efficient storage and optimised aerodynamics, choose the Dacia 310-litre towbar box, compatible with our 2- or 3-bike tilting cycle carriers. Your personal belongings are easy to load and unload, and the boot remains accessible thanks to the tilting platform. You can convert everything back into a bicycle rack for your getaways.

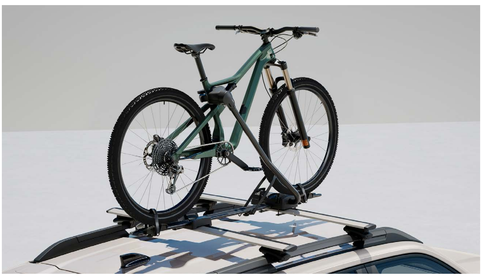

TRANSVERSE ROOF BARS(1)
Ideal for adding a bicycle rack, ski rack or roof box and increasing your vehicle's carrying capacity(2). Thanks to the innovative Quickfix quick fastening system, they can easily be installed on longitudinal bars and no tools are required.

RUBBER MATS WITH TOPOGRAPHIC PATTERNS
Check out Dacia's rubber floor mats with high edges and topographical patterns, made from 20% recycled material. They provide extra protection for your vehicle and add a sense of elegance and modernity.

PREMIUM TEXTILE FLOOR MATS
Add extra protection to your vehicle with these custom mats marked with the Dacia logo. Made of quality carpet containing 33% recycled material, they will be practical and easy to maintain.

(1) For version not equipped with modular roof bars. (2) Maximum load 80 kg.

DOWNLOAD
THE ACCESSORIES BROCHURE

	mild hybrid 140
ENGINES	
Energy	Petrol / Electric mild hybrid 48V
Driving in full electric mode	-
Max. power kW EEC (hp) at an engine speed of (rpm)	103 (140 hp) at 4,500-5,500
Max torque N.m EEC (m.kg) at an engine speed of (rpm)	230 at 1,750-3,500
Injection type	Direct injection
Capacity (cc)	1,199
Number of cylinders/valves	3 cylinders / 12 valves
Emission control standard	Euro 6E bis
Particulate filter(1)	Yes
Stop & Start(2)	Yes
BATTERIES	
Traction battery	Lithium-ion / 48 V / 0.84 kWh
PERFORMANCE	
Maximum speed (mph)	180
0-62 mph (s)	9.9
GEARBOX AND TRANSMISSION	
Transmission	4x2
Gearbox type / number of gears	Manual/6
STEERING	
Steering	Electric power-assisted steering
Turning circle, kerb to kerb (m)	10.96
BRAKING	
Front: ventilated disc (VD)/diameter (mm)	280
Rear: drum (D)/diameter (mm)	Manual parking brake: drums/ Auto parking brake: solid disc 280
WHEELS AND TYRES	
Standard tyre size	Expression 17" Journey and Extreme 18"
FUEL CONSUMPTION AND EMISSIONS(3)	
Approval protocol	WLTP(4)
Eco mode	Yes
Fuel tank capacity (l)	50
CO_2 emissions (g/km)	123
Consumption over a combined cycle (l/100 km)	52.3
WEIGHTS (KG) AND VOLUMES (DM³ OR LITRES)	
Max. unladen kerb weight	1,376
Gross train weight (GTW)	3,330
Gross vehicle weight (GVW)	1,830
Max./min. payload(5)	454/528
Max. braked towing weight	1,500
Max. unbraked towing weight	685
Max. boot volume under luggage space cover with repair kit / with spare wheel(6)(7) (dm³ VDA)	517/474
Max. boot capacity, rear bench seat folded with repair kit / with spare wheel(6)(7) (dm³ VDA)	1,609/1,566
Max. boot volume under luggage space cover with repair kit / with spare wheel(6)(7) (litres)	594/545
Max. boot volume with rear bench seat folded down with repair kit / with spare wheel(6)(7) (litres)	1,696/1,653

(1) Petrol engines with particle filter (DPF): to reduce particle emissions, the new direct injection petrol engines now include a particle filter in the exhaust line. The filter removes particles in the exhaust gases, then burns them using automatic and very regular regeneration. The particle filter requires no maintenance. (2) The vehicle's starter and battery are adjusted for use with the Stop & Start system. Automatic Stop & Start management on mild hybrid 140, hybrid-G 150 4x4, hybrid 150 4x4 and hybrid 155. (3) Official consumption and emissions according to applicable regulations. (4) wltp (Worldwide Harmonised Light Vehicle Test Procedures): this new protocol provides results much closer to those found in daily use compared with the NEDC protocol. Fuel consumption and CO_2 emissions are certified using a standard, regulatory method. This method is identical for all manufacturers and enables vehicles to be compared with one another. (5) The payload indicated is for the lowest equipment level. (6) According to ISO standard 3832. (7) Spare wheel not available on the Eco-G 120 and Eco-G 120 auto engine.

	hybrid 155	hybrid 150 4x4
ENGINES		
Energy	Petrol / Electric full hybrid 280 V	Petrol / Electric mild hybrid 48 V
Driving in full electric mode	Yes	
Max. power kW EEC (hp) at an engine speed of (rpm)	116 (155 hp) cumulative at 5,300*	103 (140 hp) internal combustion / 113 (150 hp) cumulative
Max torque N.m EEC (m.kg) at an engine speed of (rpm)	172 (Internal combustion engine) / 205 (Electric) not cumulative at 3,000	230 (Internal combustion engine) at 1,900 - 4,000/ Electric: 87
Injection type	Direct injection	Direct injection
Capacity (cc)	1,789	1,199
Number of cylinders / valves	4 cylinders / 16 valves	3 cylinders / 12 valves
Emission control standard	Euro 6E bis	
Particulate filter(1)	Yes	
Stop & Start(2)	Yes	
BATTERIES		
Traction battery	Lithium-ion / 280 V / 1.4 kWh	Lithium-ion / 48 V / 0.84 kWh
PERFORMANCE		
Maximum speed (mph)		
0-62 mph (s)	9.4	9.2
GEARBOX AND TRANSMISSION		
Transmission	4x2	4x4 with rear electric motor
Gearbox type / number of gears	Multimode automatic / 4+2	Automatic dual clutch/6
STEERING		
Steering	Electrical power-assisted steering	
Turning circle, kerb to kerb (m)	10.96	10.87
BRAKING		
Front: ventilated disc (VD)/ diameter (mm)	296	
Rear: drum (D)/diameter (mm)	Auto parking brake: solid disc 280	Solid disc 280
WHEELS AND TYRES		
Standard tyre size	Expression 17 " Journey and Extreme 18"	
FUEL CONSUMPTION AND EMISSIONS(3)		
Approval protocol	WLTP(4)	
Eco mode	Yes	
Fuel tank capacity (l)	50	
CO_2 emissions (g/km)	106-107	130
Consumption over a combined cycle (l/100 km)	60.1-61.4	52.3
WEIGHTS (KG) AND VOLUMES (DM³ OR LITRES)		
Max. unladen kerb weight	1,454	1,472
Gross train weight (GTW)	2,655	3,425
Gross vehicle weight (GVW)	1,905	1,925
Max./min. payload(5)	451/525	453/499
Max. braked towing weight	750	1,500
Max. unbraked towing weight	725	750

(1) Petrol engines with particle filter (DPF): to reduce particle emissions, the new direct injection petrol engines now include a particle filter in the exhaust line. The filter removes particles in the exhaust gases, then burns them using automatic and very regular regeneration. The particle filter requires no maintenance. (2) The vehicle's starter and battery are adjusted for use with the Stop & Start system. Automatic Stop & Start management on mild hybrid 140, hybrid 150 4x4 and hybrid 155. (3) Official consumption and emissions according to applicable regulations. (4) wltp (Worldwide Harmonised Light Vehicle Test Procedures): this new protocol provides results much closer to those found in daily use compared with the NEDC protocol. Fuel consumption and CO_2 emissions are certified using a standard, regulatory method. This method is identical for all manufacturers and enables vehicles to be compared with one another. (5) The payload indicated is for the lowest equipment level. (6) According to ISO standard 3 832. (7) Spare wheel not available on the Eco-G 120 and Eco-G 120 auto engine.

06. EQUIPMENT & OPTIONS

	expression	journey	extreme
EXTERNAL APPEARANCE			
LED brand light	•	•	•
Automatic activation of daytime running lights	•	•	•
Grille with white hubcaps	•	•	•
Front and rear skid plates	Megalith Grey	Megalith Grey	Megalith Grey
Exterior door handles	Body-coloured	Body-coloured	Body-coloured
Door mirrors	Megalith Grey	Megalith Grey	Copper Brown
Roof bars	Black	Black	-
Modular roof bars	-	-	Black
Tinted windows (rear, quarter panels, tailgate)	-	•	•
17" Tergan alloy wheels	•	-	-
18" Tagasan diamond-cut alloy wheels	-	•	-
18" Tagasan semi-diamond-cut alloy wheels	-	-	•
SEATS AND INTERIOR TRIMS			
Air vent surrounds	Steel Grey	Steel Grey	Copper Brown
Interior door handles	Steel Grey	Steel Grey	Steel Grey
Front door pull handles	Megalith Grey Satin	Megalith Grey Satin	Khaki
Folding rear bench 1/3 & 2/3	•	•	•
Soft feel steering wheel	•	•	•
Specific Denim upholstery	•	-	-
Specific fabric upholstery for journey version	-	•	-
MicroCloud plastic-coated textile upholstery	-	-	•
ACTIVE AND PASSIVE SAFETY			
Adaptive cruise control (hybrid 155 and hybrid 150 4x4 engines)	-	•	•
6 airbags (driver and passenger front, curtain and side airbags)	•	•	•
Anti-lock brake system (ABS)	•	•	•
Automatic emergency braking with pedestrian/cyclist detection (AEBS)	•	•	•
Lane keeping assist	•	•	•
Lane departure warning system	•	•	•
Driver drowsiness and attention warning system	•	•	•
Traffic sign recognition with intelligent speed adaptation	•	•	•
Emergency Brake Assist (EBA)	•	•	•
Automatic headlighting	•	•	•
Emergency call (subject to available compatible network; 2G/3G or 4G/5G depending on the vehicle)	•	•	•
My Safety button to easily manage driver assistance systems(1)	•	•	•
Front / rear "Rescue Code®" QR Codes	•	•	•
Electronic Stability Control (ESC)(2) with Hill Start Assist (HSA)	•	•	•
Front and rear seat belts with pyrotechnic pretensioner	•	•	•
Tyre pressure detection	•	•	•
3rd rear 3-point seat belt (inertia reel)	•	•	•
Spare wheel + jack(3)	○	○	○
Tyre inflation kit	•	•	•
Isofix child seat mounting system on rear side seats	•	•	•
Electric parking brake	•	•	•
DRIVING AND CONTROL INSTRUMENTS			
Electrical power steering	•	•	•
YouClip – smartphone bracket	-	•	•
Analogue instrument panel with 3.5" TFT display and 13-function on-board computer	-	-	-
Configurable 7" digital instrument panel and 13-function on-board computer	•	•	•
Visual and audible front seat belt warning	•	•	•
Eco Mode + Stop & Start(4) + gear change indicator	•	•	•
Hill descent control system (on 4x4 + for extreme 4x2 and 4x4 versions)	•	•	•
Cruise control and speed limiter	•	•	•
Rear parking sensors	•	•	•
Front and side parking sensors	-	•	•
Rear-view camera	•	•	•
Multiview camera	-	•	•

•: available as standard; ○: available as an option; - : not available. (1) For configurable driving aids. (2) Disconnectable only on 4x4 versions. (3) The "spare wheel + jack" option replaces the "tyre inflation kit". (4) Stop & Start: automatic control on the mild hybrid 140 and hybrid 155 versions.

	expression	journey	extreme
VISIBILITY			
Front fog lights	-	•	•
Heated rear screen/timed rear screen wiper	•/•	•/•	•/•
Heated electric door mirrors	•	•	•
Rain sensors	•	•	•
COMFORT			
Manual heating and air conditioning system	•	-	-
Automatic heating and air conditioning system	-	•	•
Automatic folding door mirrors	-	•	•
Electric door locking with radio frequency remote	•	•	•
Hands-free card	-	•	•
Front electric windows	•	•	•
Electric rear windows	•	•	•
Height and depth- adjustable steering wheel	•	•	•
Height-adjustable driver's seat	•	•	•
Driver's seat with lumbar adjustment	-	•	•
Height-adjustable passenger seat	•	•	•
Semi-high centre console with armrest and storage compartment	•	•	•
2 USB-C sockets in the rear of the console	•	•	•
Front reading spotlight	-	-	-
2 front reading spotlights	•	•	•
1 reading light for rear passengers	-	•	•
12V sockets front/rear	•/•	•/•	•/•
Boot lighting	•	•	•
Wireless charger	-	•	•
MULTIMEDIA & AUDIO			
Media Display: multimedia system with 10,1" touchscreen, DAB digital radio, smartphone mirroring via USB cable or wireless via Wi-Fi, Bluetooth® connection, satellite controls on steering wheel, 4 speakers and remote services pack (see Connected services)	•	-	-
Media Nav Live: multimedia system with 10,1" touchscreen, connected navigation with automatic map updates, real-time traffic info and danger zones for 8 years (including mobile licence and data), DAB digital radio, smartphone mirroring via USB cable or wireless via Wi-Fi, Bluetooth® connection, satellite controls on steering wheel, 6 speakers, Arkamys 3D sound®, Dacia app store and remote services pack (see Connected services)	-	•	•
CONNECTED SERVICES			
Remote services pack (via the MY Dacia application) included for 8 years: find my vehicle (remote geolocation on map, my dashboard data (mileage travelled, remaining driving range)	•	•	•
FOTA (Firmware Over The Air): for installing software patches and improvements directly to the car, without the need for dealer intervention (up to 5 years)	•	•	•

•: available as standard; ○: available as an option; - : not available.

06. DIMENSIONS

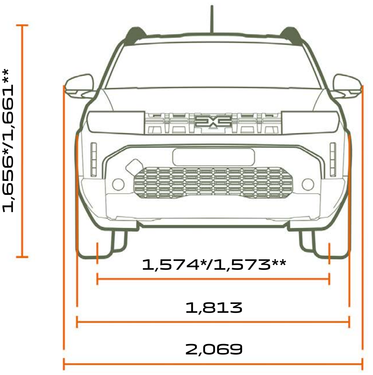

FRONT VIEW

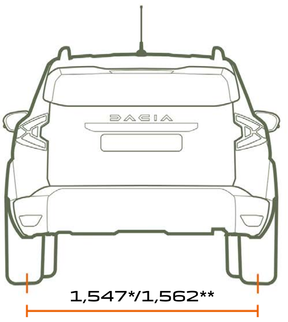

REAR VIEW

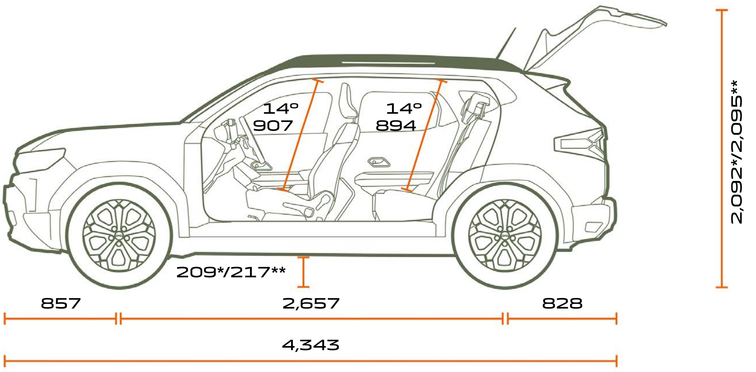

SIDE VIEW

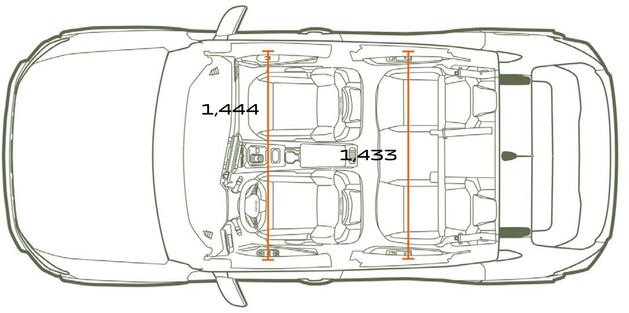

TOP VIEW

Dimensions in mm. * Version 4x2. ** Version 4x4.

BOOT VOLUME (IN DM³ - VDA STANDARD)	
Max. boot volume under luggage space cover with repair kit (in 4x2/4x4)	517/456
Max. boot volume with rear bench seat folded down with repair kit (in 4x2/4x4)	1,609/1,548

CONFIGURE AND ORDER

MENU ^

Every precaution has been taken to ensure that the contents of this brochure were accurate and up to date at the time of its release. This document was created using pre-production models and prototypes. In line with its policy of continuous product improvement, Dacia reserves the right to modify the specifications, vehicles and accessories described and featured at any time. Any such modifications are communicated to Dacia dealers as quickly as possible. Depending on the country of sale, versions may differ and some equipment may be unavailable (standard, optional or accessories). Please consult your Dacia brand representative for the latest information. Because of the limitations associated with the medium, the colours featured in this document may differ slightly from those of the actual paintwork or interior trim. All rights reserved. Reproduction in any format and by any means of all or part of this brochure is prohibited without prior written authorisation from Dacia.

Dacia recommands Castrol

PUBLICIS – PHOTO CREDITS: S. STAUB, P. CURTET, ©RENAULT MARKETING 3D-COMMERCE – OCTOBER 2026

CONFIGURE AND ORDER

BOOK A TEST DRIVE

FIND YOUR NEAREST CENTRE

MENU