DACIA
BIGSTER

THINK BIG, TRAVEL BIGSTER

Experience the city and adventure in full with Dacia Bigster. An SUV with a powerful design and bold graphic lines, it features a generous boot and an exceptionally spacious interior: up to five people can travel in ultimate comfort. Its range of engines is expanding with the addition of a 4x4 hybrid combined with an electric driving mode for city use. Bigster, better than a new SUV, an unprecedented offer the likes of which only Dacia can develop.

PANORAMIC SUNROOF(1)

POWERED TAILGATE(3)

EXCLUSIVE TWO-TONE COLOUR(2)

SPACIOUS INTERIOR

155 HP SELF-CHARGING HYBRID ENGINE

19” DIAMOND-CUT ALLOY WHEELS(3)

(1) Standard on Extreme, optional on Journey. (2) Standard on Extreme and Journey versions only. (3) Standard on Journey version.

INTERACTIVE MENU

01. DESIGN

02. DRIVING PLEASURE

03. ON-BOARD EXPERIENCE

04. CONNECTIVITY

05. DRIVER ASSISTANCE SYSTEMS

06. EQUIPMENT AND ACCESSORIES

ASSERTIVE SUV CHARACTER

Dacia Bigster now boasts modern lines and volumes for maximum robustness and interior space. The dynamic front end stands out with its sculpted bonnet and lighting signature, including the iconic Dacia Link logo. On the profiles, the Starkle® wheel arches and side protectors underline the SUV's outdoor capability.

Featuring a panoramic opening sunroof(1) standard on Extreme, optional on Journey providing unique interior light, its exclusive Indigo Blue exterior colour adds an additional touch of distinction. There's a Bigster for everyone.

Panoramic sunroof(1)

Exclusive two-tone colour version(2)

(1) Standard on Extreme, optional on Journey. (2) Standard on Extreme and Journey versions.

INTERIOR EXPERIENCE DESIGNED FOR YOU

Spacious and entirely designed for your comfort, the passenger compartment offers a contemporary environment incorporating two screens that share information to make driving easier: 10" digital dashboard for driving data[1], 10.1" central touchscreen for multimedia system management and vehicle settings. An elegant green line connects the two screens to incorporate them seamlessly into the dashboard.

Numerous details give the on-board ambience its elegance: quality of finishes and refined textures. The air vents use the exterior graphic of the Y-shaped brand light. The embossed Dacia emblem on the microcloud TEP upholstery adds a touch of exclusivity.

In the extreme version, copper-brown air vents

(1) On Extreme and Journey versions.

ALL-NEW HYBRID 150 4x4 ENGINE

Dacia is breaking new ground with the hybrid 150 4x4 engine, which offers unrivalled versatility by combining hybrid, electric 4x4 and a dual-clutch automatic gearbox. Equally at home in 4x2 or 4x4, Dacia Bigster hybrid 150 4x4 can tackle any terrain thanks to its 5 driving modes. Its electric engine, located on the rear axle, means that it can be driven 60% of the time in all-electric mode in town, significantly reducing fuel consumption and emissions. On slippery roads, Snow mode ensures optimum safety thanks to all-wheel drive.

Its 6-speed automatic gearbox with steering wheel paddles ensures ultra-responsive, smoother gear changes.

Thanks to the combination of the automatic gearbox and the rear electric engine, 4x4 driving reaches a new level of simplicity and fluidity. When negotiating tricky stretches of road, there's no need to fine-tune the throttle: the automatic gearbox instantly adjusts gear changes for smooth, controlled progress. And to get out of ruts or tackle the most technical sections, the rear electric engine's immediate torque kicks in without delay.

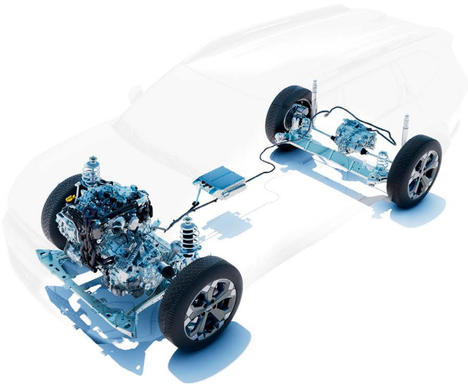

The battery recharges automatically during deceleration and braking

HIGH-PERFORMANCE HYBRID ENGINES

Dacia Bigster offers you something new with mild hybrid or full hybrid engines such as the new hybrid 155 engine derived from Renault Group research and development: to provide instant acceleration when in EV mode. The mild hybrid 140 petrol engine reduces fuel consumption and boost performance at all times.

HYBRID 155 ENGINE
Make the most of your journeys with 100% electric power and save up to 40% on fuel consumption in the city. Your battery recharges automatically during deceleration and braking.

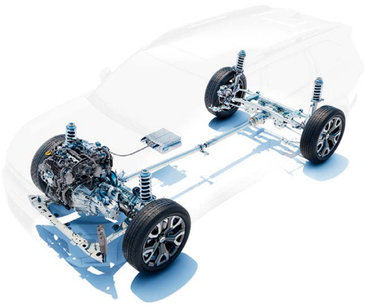

MILD HYBRID 140 ENGINE
The electric system accompanies the engine in the acceleration and braking phases to enhance the experience and reduce fuel consumption.

(1) Compared to an equivalent petrol engine.

CONFIGURE AND ORDER

MORE SPACIOUSNESS, PURE BIGSTER

Enjoy the generous welcome of Bigster's five seats. Set the height that works for you and tilt it forwards or backwards to your favourite seating position. Lumbar adjustment optimises comfort in both seats. With the hybrid 155 engine, the Journey and Extreme versions feature a high centre console with a refrigerated storage compartment.

In the rear, passengers can enjoy best-in-class knee and head room. The 40/20/40 split-folding bench seat with a centre seat that folds down into an armrest reinvents comfort and increases loading possibilities

With the hybrid 155 engine, the journey and extreme versions feature a console with a wireless charger, cup holders and a refrigerated compartment.

Front refrigerated storage

Dacia Bigster is also even more versatile thanks to its large boot with a maximum capacity up to 677 Litres. Its electric tailgate[1] simplifies all everyday, business and leisure uses.

Remarkable boot volume up to 677 litres

Powered tailgate[1]

(1) Standard on Journey versions.

ALWAYS THE RIGHT EQUIPMENT

YouClip optimises your comfort and storage space with its clever multi-purpose attachment system for hanging the wide variety of accessories available in the range. These clip onto the mountings provided in the passenger compartment and boot: up to five mountings as standard. Two additional attachment points behind the headrests are available as an accessory to extend the possibilities to seven YouClip points.

Explore outdoor activities with the Dacia InNature[1] range of accessories. With the Sleep Pack that fits into the Bigster's boot, you can enjoy a double bed (1.90 metres long and 1.30 metres wide), a handy shelf and storage space. The InNature roof rack is the perfect place for your luggage and extra leisure equipment. It is easily attached to the modular roof bars.

InNature range: integrated bed system and a new discovery, the adaptable tent

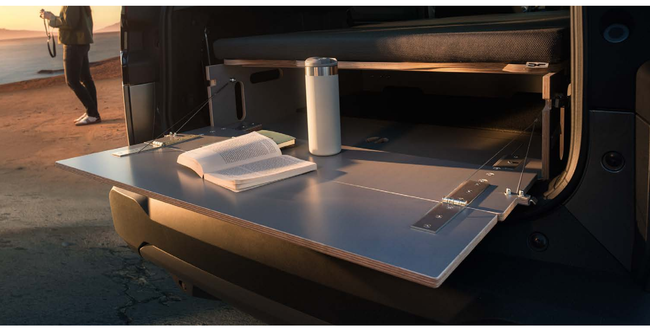

The kit can also be used as a picnic tablet or as a storage space[1]

(1) Full range of Dacia InNature accessories: Sleep pack, blackout blinds, roof awning, tailgate awning, roof rack.
(2) Depending on the version.

CONNECTED FEATURES

Information relating to driving and the new Media Nav Live multimedia system is displayed on the 10" digital dashboard[1] and 10.1" central touchscreen. Enjoy in-car navigation or mirroring from your smartphone, with real-time traffic information and up-to-date mapping for 8 years. Designed for the pleasure of five passengers, the interior ambience benefits from controlled soundproofing and the Arkamys® 3D sound system with 6 speaker.

Designed for the pleasure of five passengers, the interior ambience benefits from controlled soundproofing and the Arkamys® 3D sound system with 6 speakers[1].

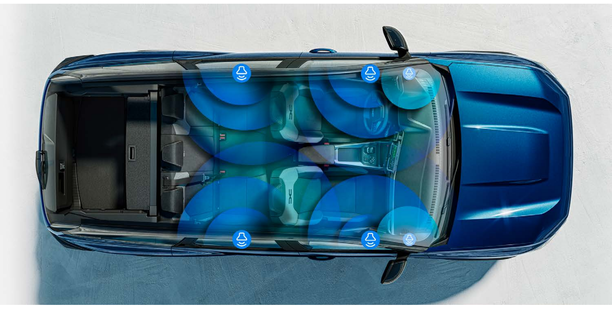

Arkamys® auditorium sound with 6 speakers

For your peace of mind, the wireless smartphone charger[2] lets you stay connected at all times. Also keep all the Dacia services concerning your vehicle at your fingertips thanks to the My Dacia app.

Track your Bigster with the My Dacia app

(1) Available on Extreme and Journey versions. (2) On extreme and journey versions.

DRIVE IN COMPLETE SAFETY

To complete the range of equipment already on board for your safety and driving comfort, Dacia Bigster is equipped with new-generation driver assistance systems. You can disable some of these features at any time by clicking on the My Safety button. With Dacia, peace of mind is with you every step of the way.

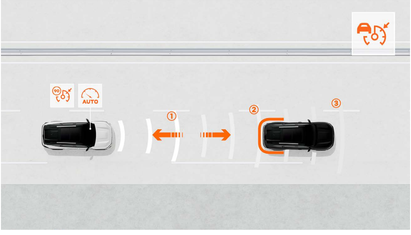

ADAPTIVE CRUISE CONTROL[1]
Let your cruise control maintain a safe following distance between you and the vehicle in front. The brakes are applied if the distance is too short and the car accelerates again when the traffic becomes more fluid.

DRIVER FATIGUE DETECTION SYSTEM
The driver fatigue detection system analyses steering wheel movements as well as other parameters such as speed or journey time. It is able to assess the driver's level of fatigue and detect signs of drowsiness. If necessary, it triggers an audible or visual alert to encourage the driver to take a break. This system can be customised via the My Safety settings. It is also possible to disable it completely.

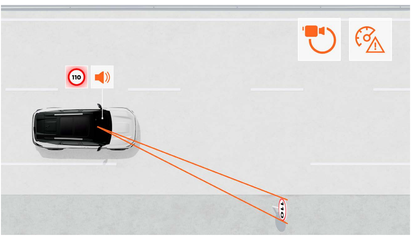

TRAFFIC SIGN RECOGNITION WITH SPEEDING ALERT
This system provides a reliable real-time indication of the maximum speed on the road and warns the driver if they exceed the speed limit with visual and audible alerts (which can be disabled). If the cruise control or speed limiter are enabled, the system suggests that if the speed limit is changed, it can be confirmed as the new set speed.

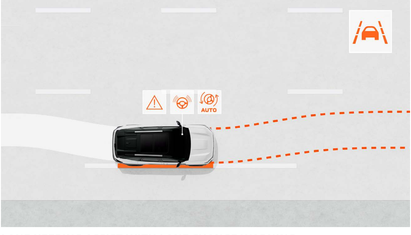

LANE KEEPING ASSIST WITH LANE CHANGE WARNING
This system monitors the vehicle's trajectory in its lane and warns the driver if the vehicle crosses a white line unintentionally. If necessary, it can also correct the vehicle's trajectory by automatically operating the steering.

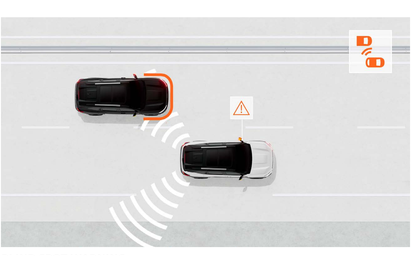

BLIND SPOT WARNING
This system monitors the driver's restricted field of vision and warns drivers by means of a visual signal if there is another vehicle or road user in their blind spot, enabling them to change lanes safely.

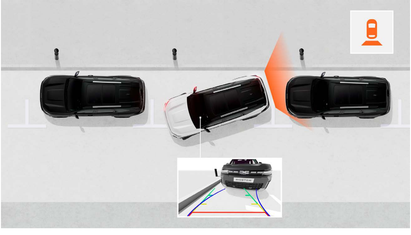

MULTIVIEW CAMERA
The MultiView Camera gives you more eyes! It provides front, rear and side views, helping you detect holes, rocks or obstacles that are not always easy to see, and making driving easier for you.

(1) Standard on Extreme and Journey hybrid 155 and hybrid 150 4x4 versions only.

CONFIGURE AND ORDER

FIND OUT MORE ABOUT THE FEATURES

COLOUR PALETTE

+

TRIMS

+

ACCESSORIES

+

ENGINES

+

EQUIPMENT AND OPTIONS

+

DIMENSIONS

+

07. COLOUR PALETTE

GLACIER WHITE	PEARL BLACK	SHADOW GREY	INDIGO BLUE	CEDAR GREEN

TERRACOTTA

EXPRESSION

GLACIER WHITE(1)

PEARL BLACK(2)

SHADOW GREY(2)

INDIGO BLUE(2)

CEDAR GREEN(2)

TERRACOTTA(2)

(1) Solid Paint. (2) Metallic paint.
Non-binding photos.

TWO-TONE ON JOURNEY

GLACIER WHITE(1)

SHADOW GREY

INDIGO BLUE

CEDAR GREEN

TERRACOTTA

(1) Solid Paint.
Two-tone paint is now standard colour on Journey and Extreme versions. Pearl black not available.

TWO-TONE ON EXTREME

GLACIER WHITE

SHADOW GREY

INDIGO BLUE

CEDAR GREEN

TERRACOTTA

Two-tone paint is now standard colour on Journey and Extreme versions. Pearl black not available.

expression

MAIN EQUIPMENT
EXPRESSION

EXTERIOR DESIGN
- LED light signature
- ECO-LED front dipped lights and rear lights
- Dacia logo at the front and White lettering at the rear
- Starkle® lower door protector and front/rear cladding
- Tergan 17" diamond- alloy wheels
- Grey Longitudinal Roof Bars
- Body-coloured bumper and door handles
- Body-coloured roof
- Grey door mirrors
- Grey front/rear claddings
- Shark antenna
- Megalith Grey door mirrors
- Megalith Grey front and rear skid plates
- Shark fin aerial

INTERIOR DESIGN
- Denim effect dashboard
- Steel Grey front door handles and Denim Blue door panels
- Leather steering wheel

LIFE ON BOARD
- 7" Digital Instrument Panel
- Multi View Camera
- Dual-zone automatic air-conditioning and rear air vents
- Keyless entry
- Manual driver seat adjustment
- Height-adjustable passenger seat
- Electrically folding door mirrors
- Electric parking brake
- Centre console with armrest and storage compartment
- 40/20/40 rear bench seat with 60/40 Easy Fold system
- 4 YouClip fixation points
- 2 additional fixation points with YouClip headrest base mouunt as an accessory

SAFETY AND DRIVING ASSISTANCE
- Rain sensors
- Fog lights 6 airbags (driver and passenger front, curtain and side)
- ABS / AEBS / LKA / LDWS / DDAW / ISA / AFU / ESP
- Automatic lights
- ECO-Mode, Stop & Start and gear shift indicator
- Isofix attachments in the rear side seats
- Tyre inflation kit
- Speed limiter and cruise control and steering column controls
- Adaptive hill descent control system (on 4x4 version)

OPTIONS
- Space-saving spare wheel (mild hybrid 140 and hybrid 155)
- Full Spare wheel (hybrid 150 4x4)
- Metallic Paint

MAIN EQUIPMENT
JOURNEY = EXPRESSION+

EXTERIOR DESIGN
- 19" Rasan diamond cut black alloy wheels
- Tinted rear windows
- Two-tone paint with black mirror caps*

INTERIOR DESIGN
- Grey dashboard
- Steel Grey front door handles and Grey door panels
- Special Journey MicroCloud plastic-coated textile upholstery

ON-BOARD EXPERIENCE
- Powered tailgate
- Keyless entry
- 10" digital driver display
- New Media Nav Live: multimedia system with 10.1" touchscreen, connected navigation with automatic map update for 8 years, radio, smartphone mirroring via USB cable or wireless via Wi-Fi, Bluetooth® connection, six speakers, Arkamys 3D sound®, Dacia app store and remote services pack
- Wireless charger
- Centre console with cup holder, armrest and refrigerated storage (with 155 hybrid engine)
- Driver and passenger lumbar adjustment
- Smartphone holder

SAFETY AND DRIVING ASSISTANCE
- Automatic main/dipped beam headlight activation
- Adaptive cruise control (with 155 hybrid engine and hybrid 150 4x4 version)

OPTIONS
- Panoramic opening sunroof
- Space-saving spare wheel (mild hybrid 140 and 155 hybrid)
- Metallic paint

*Two-tone paint with black exterior mirrors

MAIN EQUIPMENT
EXTREME = EXPRESSION +

EXTERIOR DESIGN
- 18" Tagasan black diamond-cut alloy wheels
- Copper Brown door mirrors
- Modular roof bars
- Panoramic sunroof
- Copper Brown centre caps
- Tinted rear windows
- Copper Brown lettering at the rear
- Radiator grille with copper brown details
- Two-tone paint with copper brown exterior mirrors

INTERIOR DESIGN
- Special Extreme plastic-coated textile MicroCloud upholstery
- Steel Grey front door handles and Matt Khaki door panels
- Matt Khaki dashboard
- Copper Brown air vents

ON-BOARD EXPERIENCE
- Hands-free card
- 10" digital instrument panel
- New Media Nav Live: multimedia system with 10.1" touchscreen, connected navigation with automatic map update for 8 years, radio, smartphone mirroring via USB cable or wireless via Wi-Fi, Bluetooth® connection, six speakers, Arkamys 3D sound®, Dacia app store and remote services pack
- Wireless charger
- Centre console with cup holder, armrest and refrigerated storage (with Hybrid 155 engine)
- 3-in-1 YouClip
- Textile/rubber reversible boot mat
- Front / rear rubber floor mats
- Smartphone holder

SAFETY AND DRIVING ASSISTANCE
- Automatic switching between main/dipped beam headlights
- Adaptive cruise control (with 155 hybrid engine and hybrid 150 4x4)
- Adaptive hill descent control system (on 4x4 and 4x2 versions)

OPTIONS
- Space-saving spare wheel (mild hybrid 140 and 155 hybrid)
- Spare wheel (hybrid 150 4x4)
- Metallic paint

DACIA AERO CARGO BOX™
For efficient storage and optimised aerodynamics, choose this 310-litre Dacia towbar-mounted box, compatible with our 2- or 3-bike tilting bicycle racks. Your personal belongings are easy to load and unload, and the boot remains accessible thanks to the tilting platform. You can convert it all back into a bicycle rack for your getaways.

BIGSTER ILLUMINATED FRONT DOOR SILLS AND PREMIUM TEXTILE FLOOR MATS
Elegance and modernity every time you open the door. White time-delayed lighting on your Bigster door sills turns heads day or night. Add total cabin floor protection with this set of 4 premium custom mats that contain 33% recycled material.

DACIA PORTABLE REAR ARMREST
Take advantage of the three functions of the portable armrest: storage space, rear central armrest and portable backpack. Thanks to its practical compartments, it is an indispensable ally for flawless organisation.

MULTIFUNCTION ORGANISER ON FRONT SEAT
This multifunction organiser can be installed in the back of one of the front seats in a flash. With its flexible pockets or tablet holder, it is a practical storage solution that adapts to the needs of passengers in the rear.

YOUCLIP HANGER AND YOUCLIP BRACKET ON HEADREST
Create an additional YouClip attachment point on the headrest to use the products in the range to suit your needs. And install the YouClip hanger to neatly hang clothes on the back of the front seat.

YOUCLIP MULTIMEDIA TABLET BRACKET
Allows passengers in the rear to relax, work or comfortably view the content of a touchscreen tablet up to 11".
Easy to attach to one of the front seat headrests with the YouClip mounting bracket.

ROOF RACK*
Transport bulky loads in complete safety with the roof rack from the InNature range. Once attached to the transverse bars, it can support a load of up to 60 kg.

*Not compatible with panoramic sunroof.

DOWNLOAD THE ACCESSORIES BROCHURE

07. ENGINES

	mild hybrid 140	hybrid 155
ENGINES		
Energy	Petrol / Electric mild hybrid 48V	Petrol / Electric mild hybrid 48V
Max. power kW EEC (hp) at an engine speed of (rpm)	103 (140 hp) at 5,500	116 (155 hp) at 5,300
Max torque N.m EEC (m.kg) at an engine speed of (rpm)	230 at 2,100	172 (combustion engine) / 205 (electric) at 3,000/0-1,630*
Injection type	Direct injection	Direct injection
Capacity (cm^3)	1,199	1,789
Number of cylinders/valves	3 cylinders/12 valves	4 cylinders / 16 valves
Emission control standard	Euro 6e bis	Euro 6e bis
Particulate filter(1)	Yes	
Stop & Start(2)	Yes	
BATTERY		
Traction battery	Lithium-ion / 48 V / 0.84 kWh	Lithium-ion / 280 V / 1.4 kWh
PERFORMANCE		
Maximum speed (mph)	112	112
0-62 mph (s)	9.8	9.7
GEARBOX AND TRANSMISSION		
Transmission	4x2	4x2
Gearbox type/number of gears	6-speed manual	Multimode automatic/4+2
STEERING		
Steering	Electric power-assisted steering	
Turning circle, kerb to kerb (m)	10.97	
BRAKING		
Front: ventilated disc (VD)/ diameter (mm)	Φ296x26	Φ296x26
Rear: drum (T) / diameter (inches) / solid disc	Solid disc (auto parking brake) Φ280 x 9.6	Solid disc (assisted parking brake) Φ280x9.6
WHEELS AND TYRES		
Standard tyre size	215/65/17 99 / 6.5 J17 EC32 215/60/18 98 / 6.5 J18 EC32	215/65/17 99 / 6.5 J17 EC32 215/60/18 98 / 6.5 J18 EC32 205/55/19 97 / 7 J19 EC33
FUEL CONSUMPTION AND EMISSIONS(3)		
Approval protocol	WLTP(4)	
Eco mode	Yes	
Usable fuel tank capacity (litres)	Petrol: 50	Petrol: 50
CO_2 emissions (g/km)	122/124	105/106
Combined consumption (mpg)	52.3	60.1/61.4
WEIGHTS (KG) AND VOLUMES (DM^3 OR LITRES)		
Max. unladen kerb weight	1,439	1,487
Gross train weight (GTW)	3,390	2,940
Gross vehicle weight (GVW)	1,890	1,940
Max./min. payload(5)	451/540	453/521
Max. braked towing weight	1,500	1,000
Max. unbraked towing weight	710	745

(1) Petrol engines with particle filter (DPF): to reduce particle emissions, the new direct injection petrol engines now include a particle filter in the exhaust line. The filter removes particles in the exhaust gases, then burns them using automatic and very regular regeneration. The particle filter requires no maintenance. (2) The vehicle's starter and battery are adjusted for use with the Stop & Start system. Automatic Stop & Start management on mild hybrid-G 140, mild hybrid 140, hybrid-G 150 4x4, hybrid 150 4x4 and hybrid 155. (3) Official consumption and emissions according to applicable regulations. (4) WLTP (Worldwide Harmonised Light Vehicle Test Procedures): this new protocol provides results much closer to those found in daily use compared with the NEDC protocol. Fuel consumption and CO_2 emissions are certified using a standard, regulatory method. This method is identical for all manufacturers and enables vehicles to be compared. (5) The payload indicated is for the lowest equipment level. (6) According to ISO standard 3832.
* Cannot be combined. ** Spare wheel unavailable with mild hybrid-G 140.

	hybrid 150 4x4
ENGINES	
Energy	Petrol / Electric mild hybrid 48 V
Rolling in all-electric mode	Yes
Max. power kW EEC (hp) at an engine speed of (rpm)	103 (140) combustion engine/ 113 (150) cumulative
Max torque N.m EEC (m.kg) at an engine speed of (rpm)	230 at 1,900 - 4,000 combustion engine/ 87 (electric)
Injection type	Direct injection
Capacity (cm^3)	1,199
Number of cylinders/valves	3 cylinders / 12 valves
Emission control standard	Euro 6e bis
Particulate filter(1)	Yes
Stop & Start(2)	Yes
BATTERY	
Traction battery	Lithium-ion / 48 V / 0.84 kWh
PERFORMANCE	
Maximum speed (mph)	112
0-62 mph (s)	9.8
GEARBOX AND TRANSMISSION	
Transmission	4x4 with rear electric motor
Gearbox type/number of gears	Automatic dual clutch/6
STEERING	
Steering	Electric power-assisted steering
Turning circle, kerb to kerb (m)	11.01
BRAKING	
Front: ventilated disc (VD)/ diameter (mm)	Φ296x26
Rear: drum (D) / diameter (inches) or solid discs	Assisted parking brake Φ280x9.6
WHEELS AND TYRES	
Standard tyre size	Alloy wheel: 7 J18 5 39 Tyre: 225/55 R18 102 H XL 3PMSF
FUEL CONSUMPTION AND EMISSIONS(3)	
Approval protocol	WLTP(4) TBC
Eco mode	Yes TBC
Usable fuel tank capacity (litres)	Petrol: 50
CO_2 emissions (g/km)	128-130
Combined consumption (mpg)	50-51
WEIGHTS (KG) AND VOLUMES (DM^3 OR LITRES)	
Max. unladen kerb weight	1,541
Gross train weight (GTW)	3,490
Gross vehicle weight (GVW)	1,990
Max./min. payload(5)	449/521
Max. braked towing weight	1,500
Max. unbraked towing weight	750

(1) Petrol engines with particle filter (DPF): to reduce particle emissions, the new direct injection petrol engines now include a particle filter in the exhaust line. The filter removes particles in the exhaust gases, then burns them using automatic and very regular regeneration. The particle filter requires no maintenance. (2) The vehicle's starter and battery are adjusted for use with the Stop & Start system. Automatic Stop & Start management on mild hybrid 140, hybrid 150 4x4 and hybrid 155. (3) Official consumption and emissions according to applicable regulations. (4) WLTP (Worldwide Harmonised Light Vehicle Test Procedures): this new protocol provides results much closer to those found in daily use compared with the NEDC protocol. Fuel consumption and CO_2 emissions are certified using a standard, regulatory method. This method is identical for all manufacturers and enables vehicles to be compared. (5) The payload indicated is for the lowest equipment level. (6) According to ISO standard 3832. (7) Standard spare wheel.
* Not cumulative.

CONFIGURE AND ORDER

MENU ^

07. EQUIPMENT & OPTIONS

	expression	journey	extreme
EXTERIOR DESIGN			
LED brand light	•	•	•
Body-tone bumpers	•	•	•
Body-coloured door handles	•	•	•
Door mirrors	Megalith Grey	Megalith Grey	Copper Brown
Megalith Grey longitudinal fixed roof bars	•	•	-
Modular roof bars	-	-	•
Tinted rear windows	-	•	•
ECO-LED front and rear dipped-beam headlights	•	•	•
Dacia logo at the front and lettering at the rear	White lettering	White lettering	Copper Brown lettering
Starkle® lower door protection, lower bumper and wheel arches	•	•	•
Megalith Grey front and rear skid plates	•	•	•
Shark fin aerial	•	•	•
Panoramic sunroof	-	○	•
Radiator grille with Copper Brown details and Copper Brown wheel centre caps	-	-	•
Two-tone metallic paint with black roof and door mirrors	-	•	•
Two-tone metallic paint with Copper Brown roof and door mirrors	-	-	•
17" Tergan diamond-cut alloy wheels	•	-	-
18" Tagasan diamond-cut alloy wheels	-	• 4x4 version	-
18" Tagasan black diamond-cut alloy wheels	-	-	•
19" Rasan black diamond-cut alloy wheels	-	•	-
SEATS AND INTERIOR DESIGN			
Air vent surrounds	Steel Grey	Steel Grey	Copper Brown
Interior door handles	Steel Grey	Steel Grey	Steel Grey
Door panels	Denim Blue	Grey	Khaki
1/3-2/3 split folding rear bench seat	-	-	-
40/20/40 folding rear bench seat with 60/40 Easy Fold system	•	•	•
Upholstery	Specific fabric for expression version	Specific to journey version TEP MicroCloud	Specific to extreme version TEP MicroCloud
Dashboard	Denim effect	Grey	Khaki
Height-adjustable driver's seat	•	•	•
Driver's side lumbar adjustment	•	•	•
Height-adjustable passenger seat	•	•	•
Passenger lumbar settings	-	•	-
Soft feel height- and reach-adjustable steering wheel	•	•	•
SAFETY AND DRIVING ASSISTANCE			
6 airbags (driver and passenger front, curtain and side airbags)	•	•	•
Antilock Braking System (ABS)	•	•	•
Automatic emergency braking with pedestrian/ cyclist detection (AEBS)	•	•	•
Lane-keeping assist system	•	•	•
Lane departure warning system	•	•	•
Driver drowsiness and attention warning system	•	•	•
Traffic sign recognition with intelligent speed adaptation	•	•	•
Emergency power braking (AFU)	•	•	•
Electronic stability control (ESP)	•	•	•
Automatic headlighting	•	•	•
Emergency call (E-call)(1)	•	•	•
My Safety button to easily manage driver assistance systems(2)	•	•	•
Front / rear "Rescue Code®" QR Code	•	•	•
Front and rear seat belts with pyrotechnic pretensioner	•	•	•
Tyre pressure detection	•	•	•
ECO-Mode, Stop & Start and gear change indicator	•	•	•
Isofix mounting system on rear side seats	•	•	•
Tyre inflation kit	•	•	•
Cruise control/speed limiter and steering wheel controls	•	•	•
Rear-view camera and rear sensors	•	•	•
Adaptive Hill Descent Control			On 4x4 and 4x2 versions
Rain sensors	•	•	•
Fog lights	•	•	•
Automatic main/dipped beam headlight activation	-	•	•
Adaptive cruise control (with hybrid 155 and hybrid 150 4x4 engines)	-	•	•
Electric parking brake	•	•	•
Space-saving spare wheel(3)(4) (mild hybrid 140 and hybrid 155)	○	○	○

•: available as standard; ○ available as an option; - : not available. (1) Functions subject to the availability of a compatible mobile network in the vehicle's location. (2) For configurable driving aids. (3) Not available on mild hybrid-G 140 engines. (4) The spare wheel option replaces the "tyre inflation kit".

	expression	journey	extreme
DRIVING AND CONTROL INSTRUMENTS			
Electric power steering	•	•	•
YouClip attachment points	4	4	4
Remote central locking of doors	•	•	•
Foldable key	•	-	-
Hands-free card	-	•	•
7" digital instrument panel	•	-	-
10" digital instrument panel	-	•	•
Smartphone holder	-	•	•
LIFE ON BOARD			
Dual-zone automatic air-conditioning and rear air vents	•	•	•
Heated electric door mirrors	•	•	•
Electrically folding door mirrors	•	•	•
One-touch electric windows at the front and the rear	•	•	•
Height and depth- adjustable steering wheel	•	•	•
Luggage space cover	•	•	•
Low centre console	-	-	-
Centre console with armrest and storage compartment	•	-	-
Centre console with cup holder, armrest and refrigerated storage (with 155 hybrid engine)	-	•	•
Powered tailgate	-	•	-
Wireless charger	-	•	•
3-in-1 YouClip	-	-	•
Textile/rubber reversible boot mat	-	-	•
Front and rear rubber floor mats	-	-	•
12V sockets	Front and boot	Front and boot	Front and boot
USB-C plug	2 in the front and 2 in the rear	2 in the front and 2 in the rear	2 in the front and 2 in the rear
MULTIMEDIA & AUDIO			
Media Display: multimedia system with 10.1" touch screen, radio, smartphone mirroring via USB cable or wireless via Wi-Fi, Bluetooth® telephone system, 4 speakers and remote services pack	•	-	-
Media Nav Live: multimedia system with 10.1" touchscreen, connected navigation with automatic map update for 8 years, radio, smartphone mirroring via USB cable or wireless via Wi-Fi, Bluetooth® connection, six speakers, Arkamys® 3D sound system, Dacia app store and remote services pack	○	•	•
CONNECTED SERVICES			
Remote services pack (via the MY Dacia application) included for 8 years: find my vehicle (remote geolocation on map, my dashboard data (mileage travelled, remaining driving range)	•	•	•
FOTA (Firmware Over The Air): for installing software patches and improvements directly to the car, without the need for dealer intervention (up to 5 years)	•	•	•

• : available as standard; ○ available as an option; - : not available.

CONFIGURE AND ORDER

MENU ^

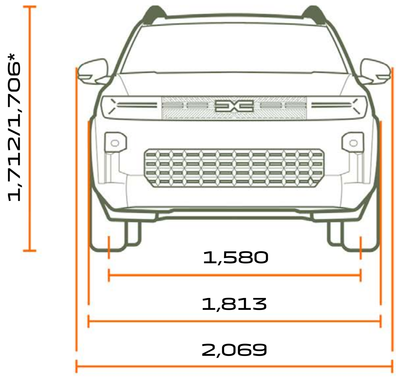

FRONT VIEW

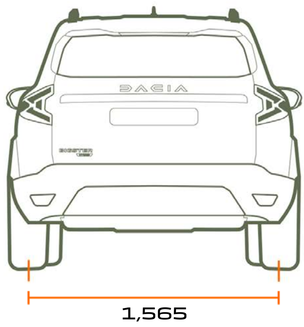

REAR VIEW

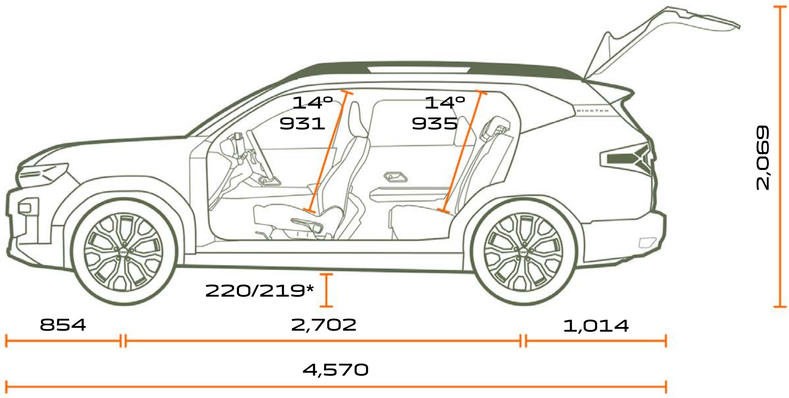

SIDE VIEW

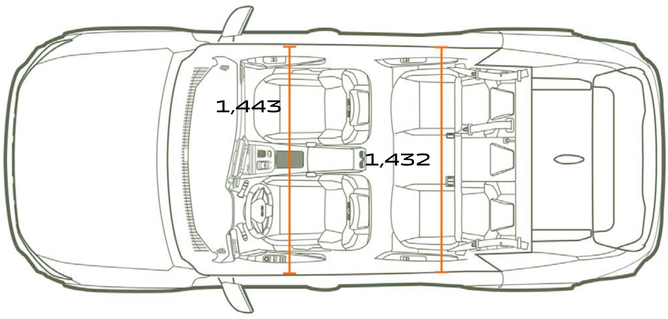

TOP VIEW

*4x2/4x4

CONFIGURE AND ORDER

Every precaution has been taken to ensure that the contents of this brochure were accurate and up to date at the time of its release. This document has been created using pre-production and prototype models. As part of its ongoing product improvement policy, Dacia reserves the right to change the specifications, vehicles and accessories described and featured at any time. Any such modifications are communicated to Dacia dealers as quickly as possible. Depending on the country of sale, versions may differ and some equipment may be unavailable (standard, optional or accessories). Please consult your Dacia brand representative for the latest information. For reasons to do with the medium, the colours featured in this document may differ slightly from those of the actual paintwork or interior trim. All rights reserved. Reproduction in any format and by any means of all or part of this brochure is prohibited without prior written authorisation from Dacia.

Dacia recommends Castrol

PUBLICIS – CRÉDITS PHOTO : F. SCHLOSSER, ©RENAULT MARKETING 3D-COMMERCE – AUGUST 2026.

CONFIGURE AND ORDER

BOOK A TEST DRIVE

FIND YOUR NEAREST CENTRE

MENU